VLBI Equipment - Pico Veleta
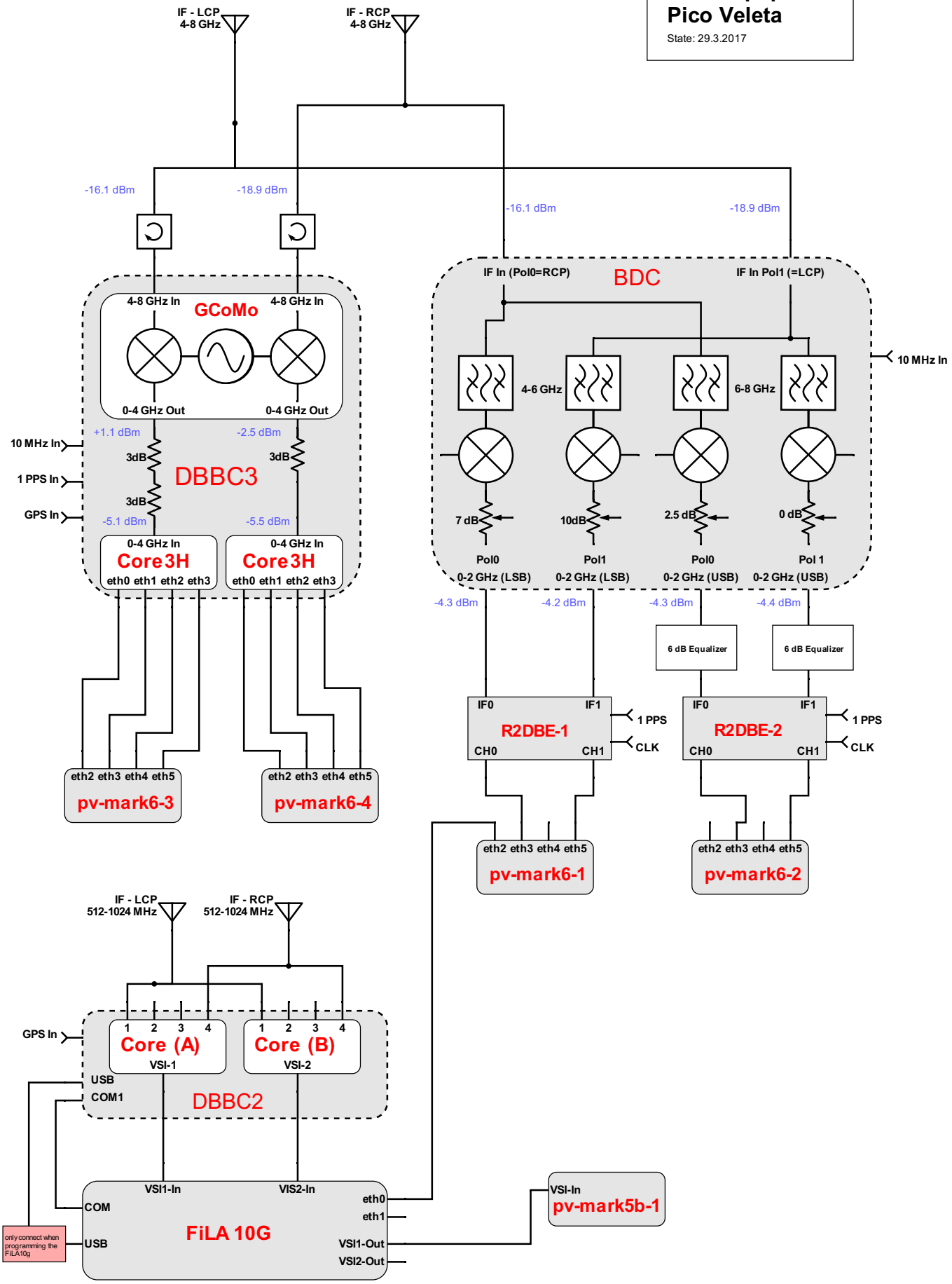
State: 29.3.2017